Thinking of you

Electrolux

user manual

Dishwasher

ESF 45010

We were thinking of you

when we made this product

Welcome to the world of Electrolux

You've chosen a first class product from Electrolux, which hopefully will provide you with lots of pleasure in the future. Electrolux ambition is to offer a wide variety of quality products that make your life more comfortable. You can look at some examples on the cover in this manual. But now it's time to study this manual and start using and enjoying the benefits from your new machine. We promise that it'll make your life a little easier. Good luck!

117997 87/1

Contents

Safety information	5
Product description	7
Control panel	8
First use	11
Daily use	15
Washing programmes	27
Care and cleaning	28
Something not working	30
Technical data	33
Hints for test institutes	35
Installation	36
Environment concerns	41

The following symbols are used in this manual:

Important information concerning your personal safety and information on how to avoid damaging the appliance.

General information and tips

Environmental information

Safety information

In the interest of your safety and to ensure the correct use, before installing and first using the appliance, read this user manual carefully, including its hints and warnings. To avoid unnecessary mistakes and accidents, it is important to ensure that all people using the appliance are thoroughly familiar with its operation and safety features. Save these instructions and make sure that they remain with the appliance if it is moved or sold, so that everyone using it through its life will be properly informed on appliance use and safety.

Correct use

- This dishwasher is only intended for washing household utensils suitable for machine washing.
- Do not put any solvents in the dishwasher. This could cause an explosion.
- Knives and other items with sharp points must be loaded in the cutlery basket with their points down or placed in a horizontal position in the upper basket.
- Only use products (detergent, salt and rinse aid) suitable for dishwashers.
- Avoid opening the door whilst the appliance is in operation, hot steam may escape.
- Do not take any dishes out of the dishwasher before the end of the dishwashing cycle.
- After use, isolate the appliance from the power supply and turn off the water supply.
- This product should be serviced only by an authorised service engineer, and only genuine spare parts should be used.
- Under no circumstances should you attempt to repair the machine yourself. Repairs carried out by inexperienced persons will cause injury or serious malfunctioning. Contact your local Service Force Centre. Always insist on genuine spare parts.

General safety

- Dishwasher detergents can cause chemical burns to eyes, mouth and throat. Could endanger life! Comply with the safety instructions of the dishwasher detergent manufacturer.
- The water in your dishwasher is not for drinking. Detergent residues may still be present in your machine.
- Ensure that the door of the dishwasher is always closed when it is not being loaded or unloaded. In this way you will avoid anybody tripping over the open door and hurting themselves.
- Do not sit or stand on the open door.

Child safety

- This appliance is designed to be operated by adults. Don’t allow children to use the dishwasher unsupervised.

- Keep all packaging well away from children. There is risk of suffocation.
- Keep all detergents in a safe place out of children's reach.
- Keep children well away from the dishwasher when the door is open.

Installation

- Check your dishwasher for any transport damage. Never connect a damaged machine. If your dishwasher is damaged contact your supplier.
- All packaging must be removed before use.
- Any electrical and plumbing work required to install this appliance must be carried out by a qualified and competent person.
- For safety reasons it is dangerous to alter the specifications or attempt to modify this product in any way.
- Never use the dishwasher if the electrical supply cable and water hoses are damaged; or if the control panel, work top or plinth area are damaged such that the inside of the appliance is freely accessible. Contact your local Service Force centre, in order to avoid hazard.
- All sides of the dishwasher must never be drilled to prevent damage to hydraulic and electric components.

For electrical and water connection carefully follow the instructions given in specific paragraphs.

Product description

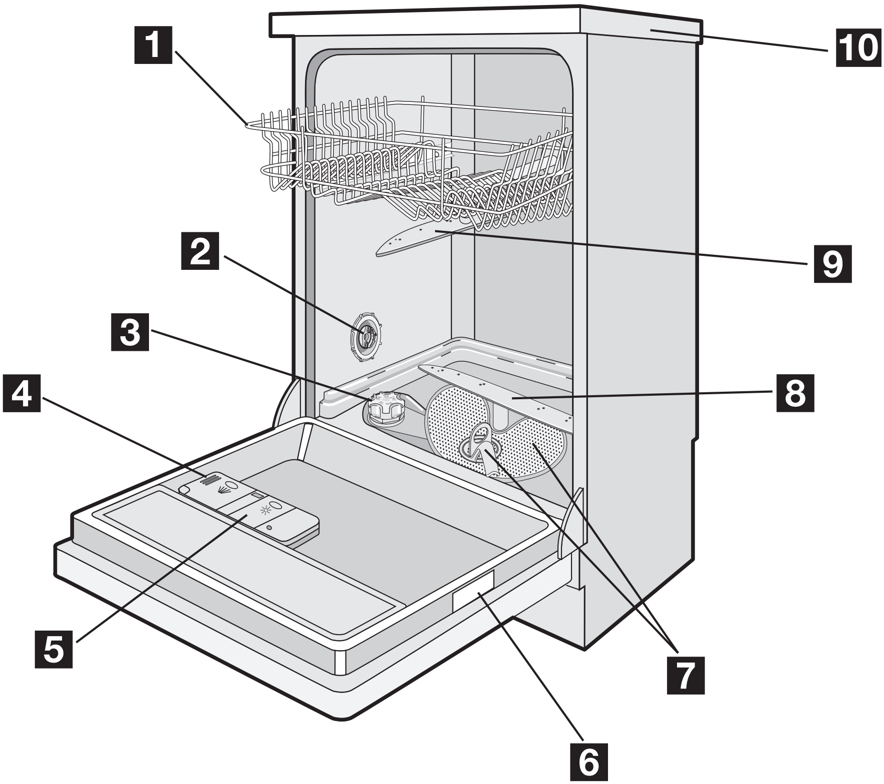

1 Upper basket

2 Water hardness dial

3 Salt container

4 Detergent dispenser

5 Rinse aid dispenser

6 Rating plate

7 Filters

8 Lower spray arm

9 Upper spray arm

10 Worktop

Control panel

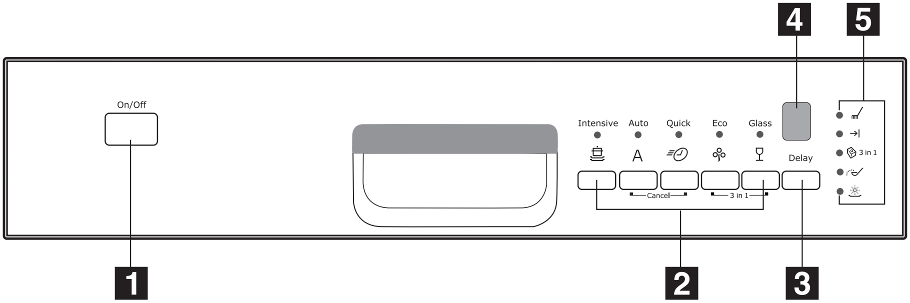

1 **On/Off button**

2 **Programme selection buttons**

3 **Delay start button**

4 **Digital display**

5 **Indicator lights**

Indicator lights	
Programme in progress	Illuminates when a washing programme is set and remains illuminated for all the duration of the washing programme. Turns off when the washing programme has ended.
End of programme	Illuminates when a washing programme has ended. It also has added functions of visual signalling as: - the setting of the water softener, - activation/deactivation of the rinse aid dispenser, - intervention of an alarm due to the malfunction of the machine.
3 in 1 function 3 in 1	Indicates the activation/deactivation of the "3 in 1 function" (see "3 in 1 function").
Salt	Illuminates when the special salt has run out.
Rinse aid	Illuminates when the rinse aid has run out.

The salt and rinse aid indicator lights are never illuminated while a washing programme is running even if filling with salt and/or rinse aid is necessary.

Setting mode

- Press On/Off button, **ALL** programme button lights are illuminated and in the digital display 3 horizontal lines are visible = appliance in setting mode.
- Press On/Off button, **ONLY** a programme button light is illuminated and in the digital display 1 horizontal line is visible = last performed or selected programme still set.
  In this case, to return to setting mode, the programme has to be cancelled.

Simultaneously press and hold the two programme buttons positioned over the word **Cancel**, until all the programme button lights will illuminate and in the digital display 3 horizontal lines appear.

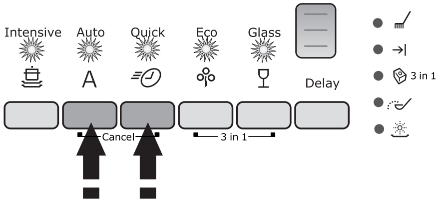

The programme has been cancelled and the machine is now in setting mode.

Always remember that when:

- setting a washing programme,
- setting the water softener,
- activating/deactivating the rinse aid dispenser,

the appliance **MUST** be in setting mode.

First use

Before using your dishwasher for the first time:

- Ensure that the electrical and water connections comply with the installation instructions
- Remove all packaging from inside the appliance
- Set the water softener
- Pour 1 litre of water inside the salt container and then fill with dishwasher salt
- Fill the rinse aid dispenser

If you want to use combi detergent tablets such as: "3 in 1", "4 in 1", "5 in 1" etc... set the 3 in 1 function (see "3 in 1 function").

Set the water softener

The dishwasher is equipped with a water softener designed to remove minerals and salts from the water supply, which would have a detrimental or adverse effect on the operation of the appliance.

The higher the content of these minerals and salts, the harder your water is.

Water hardness is measured in equivalent scales, German degrees (°dH), French degrees (°TH) and mmol/l (millimol per litre - international unit for the hardness of water).

The softener should be adjusted according to the hardness of the water in your area. Your local Water Authority can advise you on the hardness of the water in your area.

Water hardness			Adjusting the water hardness setting		Use of salt
°dH	°TH	mmol/l	manually	electronically	
51 - 70	91 - 125	9,0 - 12,5	2	level 10	yes
43 - 50	76 - 90	7,6 - 8,9	2	level 9	yes
37 - 42	65 - 75	6,5 - 7,5	2	level 8	yes
29 - 36	51 - 64	5,1 - 6,4	2	level 7	yes
23 - 28	40 - 50	4,0 - 5,0	2	level 6	yes
19 - 22	33 - 39	3,3 - 3,9	2	level 5	yes
15 - 18	26 - 32	2,6 - 3,2	1	level 4	yes
11 - 14	19 - 25	1,9 - 2,5	1	level 3	yes
4 - 10	7 - 18	0,7 - 1,8	1	level 2	yes
< 4	< 7	< 0,7	1	level 1	no *

* no salt is necessary

The water softener must be set in both ways: manually, using the water hardness dial and electronically, using some of the programme buttons on the control panel

Setting manually

The dishwasher is factory set at position 2.

1. Open the dishwasher door.
2. Remove the lower basket from the dishwasher.
3. Turn the water hardness dial to position 1 or 2 (see table).
4. Replace the lower basket.

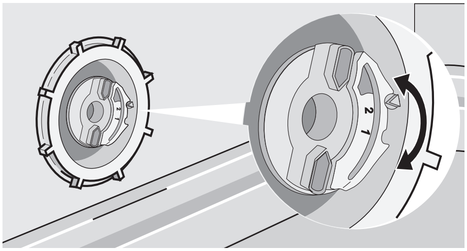

Setting electronically

The dishwasher is factory set at level 5.

1. Press the On/Off button. The dishwasher must be in setting mode.

2. Press simultaneously and keep pressed buttons 2 and 3, until the lights of buttons 1, 2 and 3 start flashing.

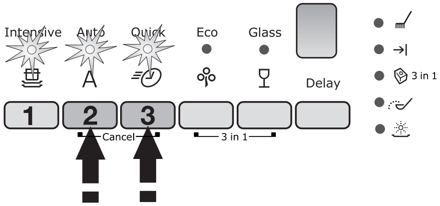

3. Press button 1, the lights of buttons 2 and 3 turn off while the light of the button 1 goes on flashing, at the same time the **end of programme** indicator light starts to flash.

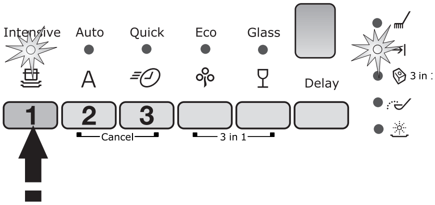

   The current level is indicated by the number of flashes of the **end of programme** indicator light.

   Examples:

   5 flashes, pause, 5 flashes, pause, etc... = level 5

   6 flashes, pause, 6 flashes, pause, etc... = level 6

4. To change the level, press function button 1. Each time the button is pressed the level changes. (For the selection of the new level see the chart).

   Examples:

   if the current level is 5, by pressing function button 1 once, level 6 is selected.

   if the current level is 10, by pressing function button 1 once, level 1 is selected.

5. To memorise the operation, switch off the dishwasher by pressing the On/Off button.

Filling with dishwasher salt

Only use salt specifically designed for use in dishwashers.
All other types of salt not specifically designed for use in a dishwasher, especially table salt, will damage the water softener.
Only fill with salt just before starting one of the complete washing programmes.
This will prevent any grains of salt or salty water, which may have been spilt, remaining on the bottom of the machine for any period of time, which may cause corrosion.

To fill:

1. Open the door, remove the lower basket and unscrew the cap of the salt container by turning it anticlockwise.
2. Pour 1 litre of water inside the container **(this is necessary only before filling with salt for the first time).**
3. Using the funnel provided, pour in the salt until the container is full.

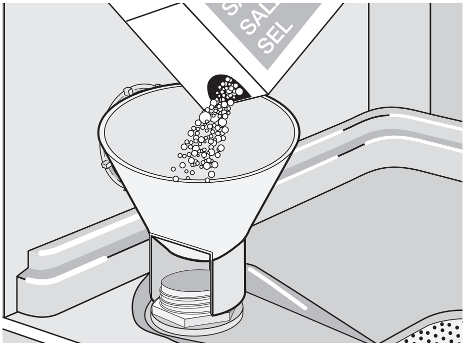

4. Replace the cap making sure that there is no trace of salt on the screw thread or on the gasket.
5. Replace the cap tightly turning it clockwise until it stops with a click.

Do not worry if water overflows from the unit when filling with salt, this is quite normal.

The salt indicator light on the control panel can remain illuminated for 2-6 hours after the salt has been replenished, assuming the dishwasher remains switched on. If you are using salts that take longer to dissolve then this can take longer. The function of the machine is not affected.

Filling with rinse aid

Rinse aid ensures thorough rinsing, and spot and streak free drying.

Rinse aid is automatically added during the last rinse.

1. Open the container by pressing the release button (A).

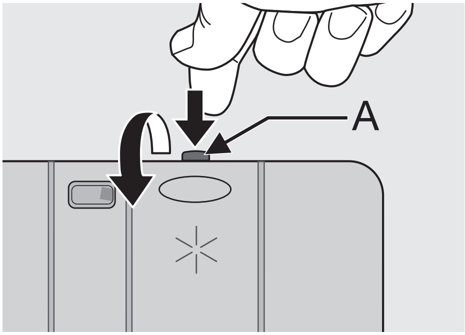

2. Add the rinse aid in the container. The maximum level for filling is indicated by "max".

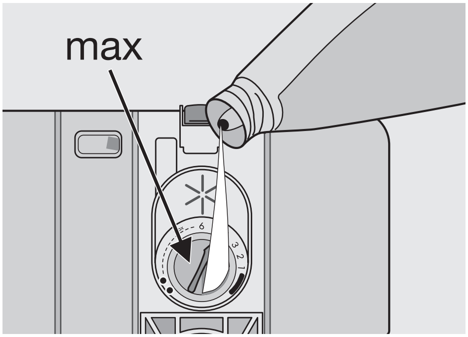

The dispenser holds about 110 ml of rinse aid, which is sufficient for between 16 and 40 dishwashing cycles, depending upon the dosage setting.

According to the finish and drying results obtained, adjust the dose of rinse aid by means of the 6 position selector (position 1 minimum dosage, position 6 maximum dosage).

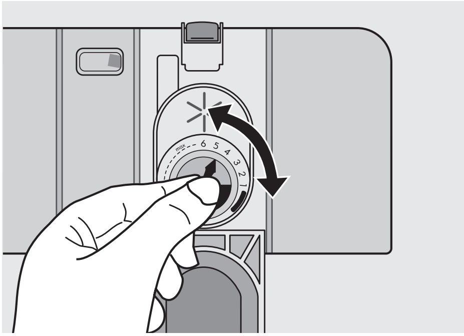

The dose is factory set in position 4.

Increase the dose if there are drops of water or lime spots on the dishes after washing.

Reduce it if there are sticky whitish streaks on the dishes or a bluish film on glassware or knife blades.

3. Ensure that the lid is closed after every refill.

Clean up any rinse aid spilt during filling with an absorbent cloth to avoid excess foaming during the next wash.

Only use branded rinse aid for dishwashers.

Never fill the rinse aid dispenser with any other substances (e.g. dishwasher cleaning agent, liquid detergent). This would damage the appliance.

Daily use

- Check if it’s necessary to refill with dishwasher salt or rinse aid
- Load cutlery and dishes into the dishwasher.
- Fill with dishwasher detergent .
- Select a wash programme suitable for the cutlery and dishes.
- Start the wash programme.

Loading cutlery and dishes

Sponges, household cloths and any object that can absorb water may not be washed in the dishwasher.

- Before loading the dishes, you should:
  - Remove all left over food and debris.
  - Soften remnants of burnt food in pans
- When loading the dishes and cutlery, please note:
  - Dishes and cutlery must not impede the rotation of the spray arms .
  - Load hollow items such as cups, glasses, pans, etc. with the opening downwards so that water cannot collect in the container or a deep base.
  - Dishes and items of cutlery must not lie inside one another, or cover each other.
  - To avoid damage to glasses, they must not touch.
  - Lay small objects in the cutlery basket.
- Plastic items and pans with non stick coatings have a tendency to retain water drops; these items will not dry as well as porcelain and steel items.
- Light items (plastic bowls etc.) must be loaded in the upper basket and arranged so they do not move.

For washing in the dishwasher the following cutlery and dishes	
are not suitable:	- Cutlery with wooden, horn, china or mother-of-pearls handles. - Plastic items that are not heat resistant. - Older cutlery with glued parts that are not temperature resistant. - Bonded cutlery items or dishes. - Pewter or copper items. - Lead crystal glass. - Steel items prone to rusting. - Wooden platters. - Items made from synthetics fibres.
are of limited suitability:	- Only wash stoneware in the dishwasher if it is specially marked as being dishwasher-safe by the manufacturer. - Glazed patterns may fade if machine washed frequently. - Silver and aluminium parts have a tendency to discolour during washing: Residues, e.g. egg white, egg yolk and mustard often cause discolouring and staining on silver. Therefore always clean left-overs from silver immediately, if it is not to be washed straight after use.

Open the door and slide out the baskets to load the dishes.

The lower basket

The lower basket is designed to take saucepans, lids, plates, salad bowls, cutlery etc.

Serving dishes and large lids should be arranged around the edge of the basket, ensuring that the spray arms can turn freely.

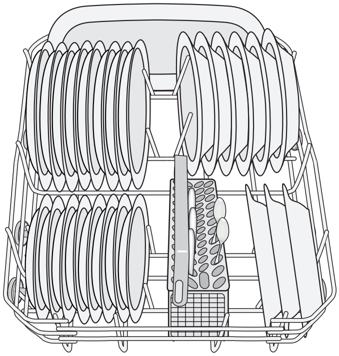

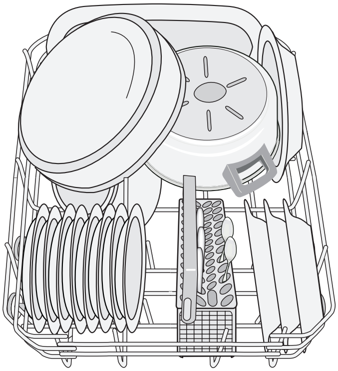

The two rows of prongs on the lower basket can be easily lowered to allow you to load pots, pans and bowls.

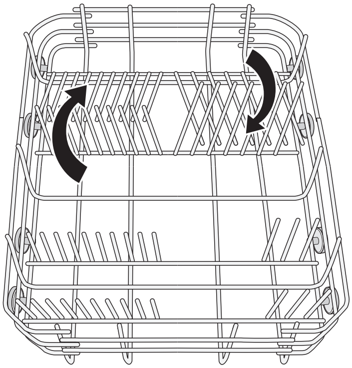

The cutlery basket

Long bladed knives stored in an upright position are a potential hazard.

Long and/or sharp items of cutlery such as carving knives must be positioned horizontally in the upper basket.

Take care when loading or unloading sharp items such as knives.

Forks and spoons should be placed in the removable cutlery basket with the handles facing downwards and the knives with their handles facing upwards (fig.1).

fig. 1

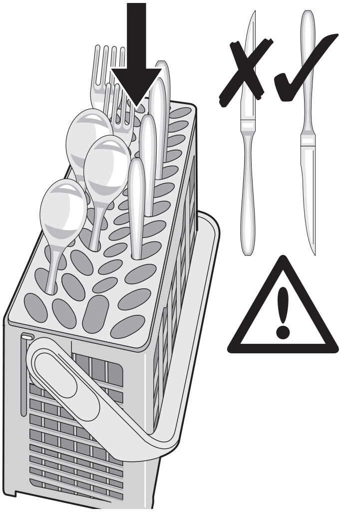

If the handles protrude from the bottom of the basket, obstructing the lower spray arm, load the cutlery with the handles facing upwards.

Mix spoons with other cutlery to prevent them from sticking together.

To make easier the loading of the cutlery basket we advise you to lower the cutlery basket's handle (fig.2).

fig. 2

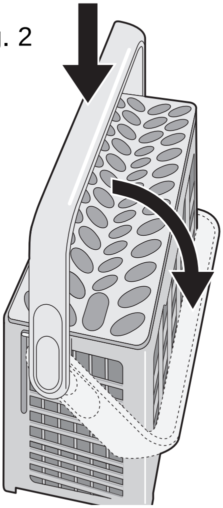

For best results we recommend you to use the cutlery grid.

If the size and dimensions of the cutlery do not allow the use of the grid, it can be easily hidden (fig. 3).

fig. 3

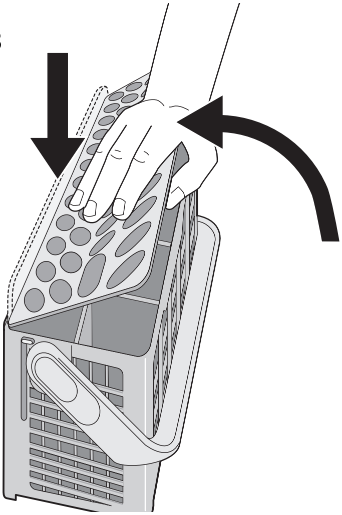

The upper basket

The upper basket is designed for plates (dessert plates, saucers, dinner plates of up to 24 cm in diameter), salad bowls, cups and glasses.

Arrange items on and underneath the cup racks so that water can reach all surfaces.

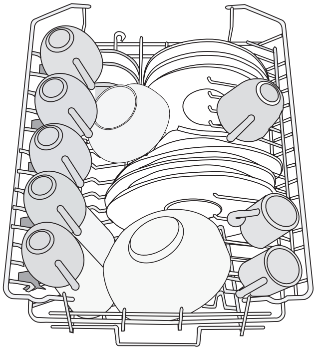

Glasses with long stems can be placed upside down in the cup racks.

For taller items, the cup racks can be folded upwards.

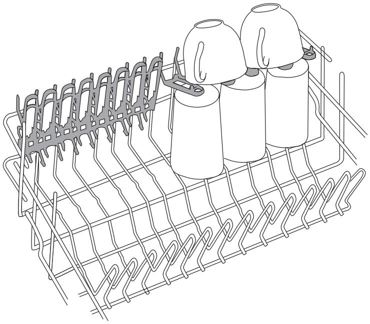

Before closing the door, ensure that the spray arms can rotate freely.

Adjusting the height of the upper basket

If washing very large plates you can load them in the lower basket after moving the upper basket to the higher position.

Maximum height of the dishes in:		
	the upper basket	the lower basket
With upper basket raised	20 cm	31 cm
With upper basket lowered	24 cm	27 cm

To move to the higher position proceed as follows:

1. Pull out the basket until it stops.
2. Carefully lift both sides upwards until the mechanism is engaged and the basket is stable.

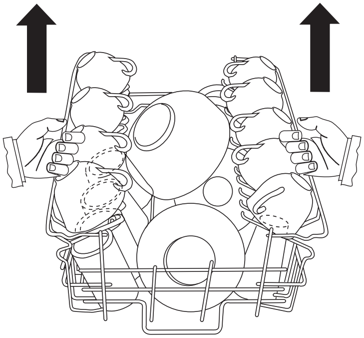

To lower the basket to the original position proceed as follows:

1. Pull out the basket until it stops.
2. Carefully lift both sides upwards and then allow the mechanism to drop back down slowly, keeping hold of it.

Never lift or lower the basket on one side only

When the basket is in the higher position you will not be able to use the cup racks.

After loading your machine always close the door, as an open door can be a hazard.

Use of detergent

Only use detergents specifically designed for use in dishwashers.

Please observe the manufacturer’s dosing and storage recommendations as stated on the detergent packaging.

Using no more than the correct amount of detergent contributes to reducing pollution.

Fill with detergent

1. Open the lid.

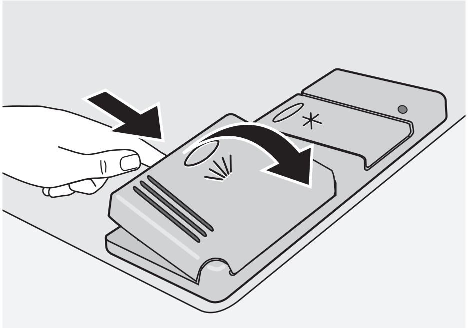

2. Fill the detergent dispenser (1) with detergent. The marking indicates the dosing levels:

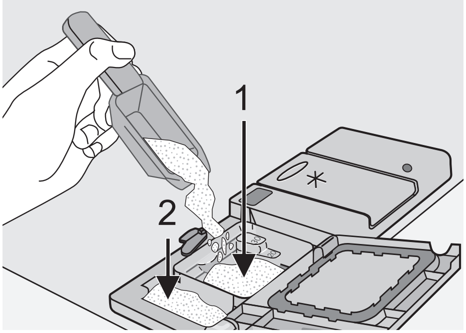

   20 = approximately 20 g of detergent

   30 = approximately 30 g of detergent

3. All programmes with prewash need an additional detergent dose (5/10 g) that must be placed in the prewash detergent chamber (2). This detergent will take effect during the prewash phase.

   When using detergent tablets; place the tablet in compartment (1)

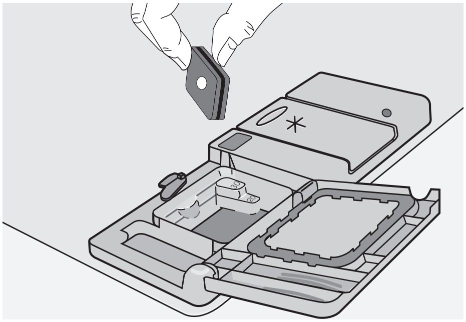

4. Close the lid and press until it locks in place.

Detergent tablets

Detergent tablets from different manufactures dissolve at different rates. For this reason, some detergent tablets do not attain their full cleaning power during short washing programmes. Therefore, please use long washing programmes when using detergent tablets, to ensure the complete removal of detergent residuals.

"3 in 1 function"

This appliance is equipped with the "3 in 1 function", that allows the use of the "3 in 1" combi detergent tablets.

These products are detergents with a combined cleaning, rinsing and salt functions. They can also contain other different agents depending on which kind of tablets you choose ("3 in 1", "4 in 1", "5 in 1" etc...)

Check whether these detergents are suitable for your water hardness. See the manufacturers instructions.

With the selection of this function the inflow of rinse aid and salt from each respective supply container is automatically deactivated and also the indicator lights for salt and rinse aid are deactivated.

Select the "3 in 1 function" before the start of a washing programme.

Once this function is selected (indicator light illuminated) it will remain active also for the following washing programmes.

With the use of the "3 in 1 function", the cycle durations may change.

Once the programme is running, the "3 in 1 function" can **NO** longer be changed. If you want to exclude the "3 in 1 function" you have to cancel the programme setting and then deactivate the "3 in 1 function".
In this case you have to set a washing programme (and desired options) again.

Activation/deactivation of the 3 in 1 function

Press simultaneously the two buttons positioned over the writing 3 in 1, until the "3 in 1 function "indicator light illuminates. This means that the function is active.

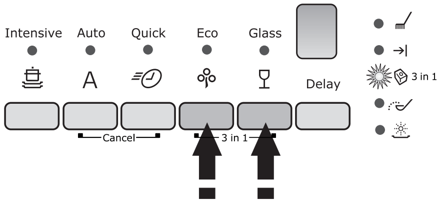

To deactivate the function press the same buttons again until the indicator light corresponding to the "3 in 1" symbol turns off.

If the drying results are not satisfactory we suggest that you:

1. Fill up the rinse aid dispenser with rinse aid.
2. Activate the rinse aid dispenser.
3. Set the rinse aid dosage to position 2.

- The activation/deactivation of the rinse aid dispenser can only be possible with the "3 in 1 function" active.

Activation/deactivation of the rinse aid dispenser

1. Press the On/Off button. The dishwasher must be in setting mode.

2. Press simultaneously buttons 2 and 3, until the indicator lights of buttons 1, 2, and 3 start flashing.

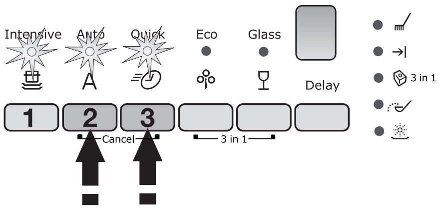

3. Press button 2, the indicator lights of buttons 1 and 3 turn off while the indicator light of button 2 goes on flashing.

4. To activate the rinse aid dispenser, press button 2 again, the **end of programme** indicator light illuminates, indicating that the rinse aid dispenser has been activated.

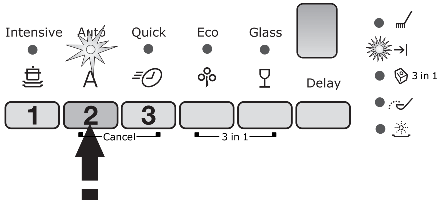

5. To memorise the operation, switch off the dishwasher by pressing the On/Off button.

6. To deactivate the rinse aid dispenser again, follow the above instructions until the **end of programme** indicator light turns off.

If you decide to turn back to the use of standard detergent system we advise that you:

1. Deactivate the 3 in 1 function.
2. Fill up the salt container and the rinse aid dispenser again.
3. Adjust the water hardness setting to the highest setting and perform 1 normal washing programme without loading any dishes.
4. Adjust the water hardness setting according to the hardness of the water in your area.
5. Adjust the rinse aid dosage.

Select and start a washing programme

Select the washing programme and delay start with the door slightly opened. The start of the programme or the countdown of the delay start will occur only after the closure of the door. Until that moment it is possible to modify the set made.

1. Check that the baskets have been loaded correctly and that the spray arms are free to rotate
2. Check that the water tap is opened
3. Press the On/Off button. The dishwasher must be in setting mode.
4. Press the button corresponding to the required programme (see "Washing programmes" chart). The indicator light corresponding to the selected programme will illuminate.

   In the digital display 3 horizontal lines are visible.

   The **programme in progress** indicator light illuminates.

   Close the dishwasher’s door, the programme starts automatically.

   The **programme in progress** indicator light remains illuminated.

   In the digital display is visible only 1 horizontal line and will remain on for all the duration of the washing programme.

Setting and starting the programme with "delay start"

1. After having selected the washing programme, press the delay start button until the flashing number of hours for the delay start will appear in the digital display. You can choose from 1 to 9 hours of delay.
2. Close the dishwasher’s door, the countdown starts automatically. The number in the display is no longer flashing but fixed with static light.
3. The countdown will decrease with steps of 1 hour
4. The opening of the door will not modify or interrupt the countdown.
5. Once the delay start has elapsed the programme will start automatically.

With the delay start function set, the **programme in progress** indicator light is off. Once the countdown of the delay start has elapsed, the washing programme will start automatically and the **programme in progress** indicator light will illuminate.

The selection of the washing programme and delay start can also occur with the door closed. Keep in mind that in this way, once a washing programme button is pressed you have **ONLY 3 seconds** in which you can choose another programme or select a delay start, after which the selected programme will start automatically.

Cancelling the "delay start"

- To cancel a delay start in progress you have to reset the dishwasher.
- Press simultaneously and keep pressed the two programme buttons positioned over the writing **Cancel**, until all the programme button lights will illuminate.

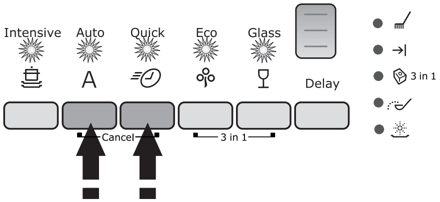

- Cancelling a delay start involves also the cancelling of the washing programme set. In this case you have to set the washing programme again.

Interrupt or cancel a washing programme in progress ONLY if it's absolutely necessary.
Attention! Hot steam may escape when the door is opened. Open the door carefully.

Interrupt a washing programme in progress:

- Open the dishwasher door; the programme will stop. Close the door; the programme will start from the point at which it was interrupted.
- Press the On/Off button, all indicator lights will turn off. Press the On/Off button again; the programme will start from the point at which it was interrupted.

Cancel a washing programme in progress

- Press simultaneously and keep pressed the two programme buttons positioned over the writing **Cancel**, until all the programme button lights and in the digital display 3 horizontal lines appear. The washing programme has been cancelled.
- If a new washing programme is to be selected, check that there is detergent in the detergent dispenser.

End of the washing programme

- The dishwasher will automatically stop and the **programme in progress** indicator light turns off.
- The **end of programme** indicator light will illuminate.
- The indicator light of the programme just ended will remain on.
- The digital display turns off.

1. Switch off the dishwasher by pressing the On/Off button.
2. Open the dishwasher's door, leave it ajar and wait a few minutes before removing the dishes; in this way they will be cooler and the drying will be improved.

Unloading the dishwasher

- Hot dishes are sensitive to knocks. The dishes should therefore be allowed to cool down before removing from the appliance.
- Empty the lower basket first and then the upper one; this will avoid water dripping from the upper basket onto the dishes in the lower one.
- Water may appear on the sides and the door of the dishwasher as the stainless steel will eventually become cooler than the dishes.

When the washing programme has finished, it is recommended that the dishwasher is unplugged and the water tap turned off.

Washing programmes

Programme	Degree of soil	Type of load	Programme description
Intensive	Heavy soil	Crockery, cutlery, pots and pans	Prewash Main wash up to 70°C 2 intermediate rinses Final rinse Drying
A Auto (1)	Normal soil	Crockery, cutlery, pots and pans	Prewash Main wash up to 50°C or 65°C 2 intermediate rinses Final rinse Drying
Quick (2)	Normal or light soil	Crockery and cutlery	Main wash up to 60°C Final rinse
Eco (3)	Normal soil	Crockery and cutlery	Prewash Main wash up to 50°C 1 intermediate rinse Final rinse Drying
Glass	Normal soil	Delicate crockery and glassware	Main wash up to 45°C 1 intermediate rinse Final rinse Drying

Washing programmes information

(1) During the "Auto" washing programme the amount of soil on the dishes is determined by how cloudy the water is.

The programme duration, water and energy consumption levels can vary; this depends upon if the appliance is fully or partially loaded and if the dishes are lightly or heavily soiled.

The temperature of the water is automatically adjusted between 50°C and 65°C.

(2) Ideal for washing a partially loaded dishwasher. This is the perfect daily programme, made to meet the needs of a family of **4 persons** who only wish to load breakfast and dinner crockery and cutlery.

(3) Test programme for test institutes.

Care and cleaning

Cleaning the filters

The filters must be checked and cleaned from time to time. Dirty filters will degrade the washing result.

Before cleaning the filters ensure that the machine is switched off.

1. Open the door, remove the lower basket.
2. The dishwasher filter system comprises a coarse filter (**A**), a microfilter (**B**) and a flat filter. Unlock the filter system using the handle on the microfilter.

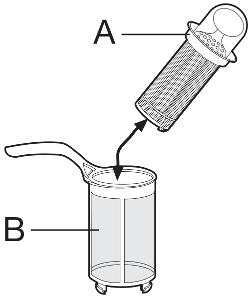

3. Turn the handle about $^1/_4$ a turn anticlockwise and remove the filter system.

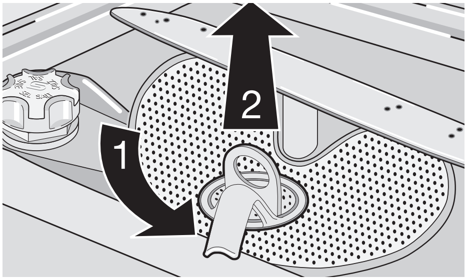

4. Take hold of the coarse filter (**A**) by the handle with the hole and remove from the microfilter (**B**).
5. Clean all filters thoroughly under running water.
6. Remove the flat filter from the base of the washing compartment and clean both faces thoroughly.

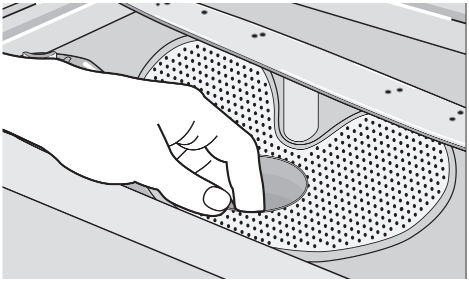

7. Put the flat filter back in the base of the washing compartment and ensure that it fits perfectly.
8. Place the coarse filter (**A**) in the microfilter (**B**) and press together.
9. Put the filter combination in place and lock by turning the handle clockwise to the stop. During this process ensure that the flat filter does not protrude above the base of the washing compartment.

NEVER use the dishwasher without filters. Incorrect repositioning and fitting of the filters will produce poor washing results and will result in damage to the appliance.

NEVER try to remove the spray arms.
If residues of soil have clogged the holes in the spray arms, remove them with a cocktail stick.

External cleaning

Clean the external surfaces of the machine and control panel with a damp soft cloth. If necessary use only neutral detergents. Never use abrasive products, scouring pads or solvent (acetone, trichloroethylene etc....).

Internal cleaning

Ensure that the seals around the door, the detergent and rinse aid dispensers are cleaned regularly with a damp cloth.

We recommend every 3 months to run the wash programme for heavy soiled dishes using detergent but without dishes.

Prolonged periods of non-operation

If you are not using the machine for any prolonged period of time you are advised to:

1. Unplug the appliance and then turn off the water.
2. Leave the door ajar to prevent the formation of any unpleasant smells.
3. Leave the inside of the machine clean.

Frost precautions

Avoid placing the machine in a location where the temperature is below 0°C. If this is unavoidable, empty the machine, close the appliance door, disconnect the water inlet pipe and empty it.

Moving the machine

If you have to move the machine (moving house etc....):

1. Unplug it.
2. Turn the water tap off.
3. Remove the water inlet and discharge hoses.
4. Pull the machine out together with the hoses.

Avoid over tilting the machine during transportation.

Something not working

The dishwasher will not start or stops during operation.
Certain problems are due to the lack of simple maintenance or oversights, which can be solved with the help of the indications described in the chart, without calling out an engineer.

Switch off the dishwasher and carry out the following suggested corrective actions.

Fault code and malfunction	Possible cause and solution
• continuous flashing of the light of the running programme, • 1 flash of the **end of programme** indicator light, The dishwasher does not fill with water	• The water tap is blocked or furred with limescale. Clean the water tap. • The water tap is turned off. Turn the water tap on. • The filter (where present) in the threaded hose fitting at the water inlet valve is blocked. Clean the filter in the threaded hose. • The water inlet hose has not been correctly laid or it is bent or squashed. Check the water drain hose connection.
• continuous flashing of the light of the running programme, • 2 flashes of the **end of programme** indicator light, The dishwasher will not drain	• The sink spigot is blocked. Clean out the sink spigot. • The water drain hose has not been correctly laid or it is bent or squashed. Check the water drain hose connection.
• continuous flashing of the light of the running programme, • 3 flashes of the **end of programme** indicator light, Anti-flood device is activated	• Close the water tap and contact your local Service Force Centre.

Malfunction	Possible cause and solution
The programme does not start	• The dishwasher’s door has not been properly closed. Close the door. • The main plug is not plugged in. Insert the main plug. • The fuse has blown out in the household fuse box. Replace the fuse. • Delay start has been set. If dishes are to be washed immediately, cancel the delay start.

Once these checks have been carried out switch on the appliance.

The programme will continue from the point at which it was interrupted.

If the malfunction or fault code reappears contact the Service Force Centre.

For other fault codes not described in the above chart, please contact your Service Force Centre.

Contact your local Service Force Centre, quoting the model (Mod.), product number (PNC) and serial number (S.N.).
This information can be found on the rating plate located on the side of the dishwasher door.

So that you always have these numbers at hand, we recommend you to make a note of them here:

Mod. : . . . .

PNC :. . . . .

S.N. : . . . .

The wash results are not satisfactory	
The dishes are not clean	• The wrong washing programme has been selected. • The dishes are arranged in such a way as to stop water reaching all parts of the surface. The baskets must not be overloaded. • The spray arms do not rotate freely due to incorrect arrangement of the load. • The filters in the base of the washing compartment are dirty or incorrectly positioned. • Too little or no detergent has been used. • Where there are limescales deposits on the dishes; the salt container is empty or the incorrect level of the water softener has been set. • The drain hose connection is not correct. • The salt container cap is not properly closed.
The dishes are wet and dull	• Rinse aid was not used. • The rinse aid dispenser is empty.
There are streaks, milky spots or a bluish coating on glasses and dishes	• Decrease rinse aid dosing.
Water drops have dries onto glasses and dishes	• Increase rinse aid dosing. • The detergent may be the cause. Contact the detergent manufacturer’s consumer care line.

If after all these checks, the problem persists, contact your local Service Force Centre.

Technical data

Dimensions	Width	45 cm
	Height	85 cm
	Depth	63 cm
Electrical connection Voltage - Overall power - Fuse	Information on the electrical connection is given on the rating plate on the inner edge of the dishwasher's door	
Water supply pressure	Minimum	0.05 MPa
	Maximum	0.8 MPa
Capacity		9 place settings
Max. weight		37 kg

Subject to change without notice

Consumption values			
Programme	**Programme duration (in minutes)**	**Energy consumption (in kWh)**	**Water consumption (in litres)**
Intensive	105 - 115	1.6 - 1.8	19 - 21
Auto	80 - 105	0.8 - 1.2	12 - 21
Quick	25 - 30	0.7 - 0.8	7 - 8
Eco (Test programme for test institutes)	160	0.8	13
Glass	55 - 65	0.6 - 0.7	11 - 12

The consumption values are intended as a guide and depends on the pressure and the temperature of the water and also by the variations of the power supply and the amount of dishes.

Hints for test institutes

Testing in accordance with **EN 60704** must be carried out with appliance fully loaded and using the test programme (see "Consumption values").

Test in accordance with **EN 50242** must be carried out when the salt container and rinse aid dispenser have been filled with salt and rinse aid respectively and using the test programme (see "Consumption values").

Full load: 9 standard place settings	
Amount of detergent required:	5 g + 20 g (Type B)
Rinse aid setting:	position 4 (Type III)

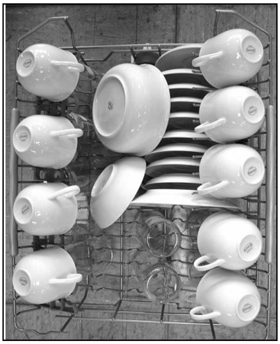

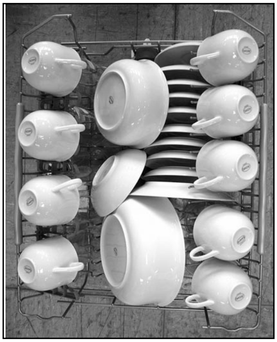

Arrangement upper basket

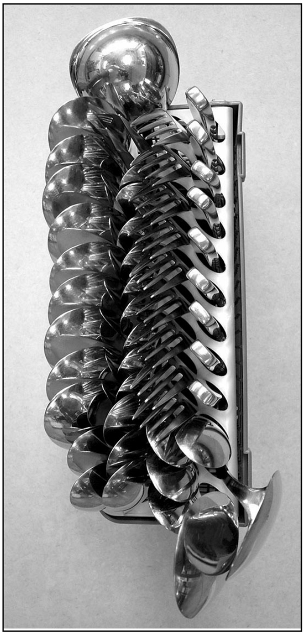

Arrangement cutlery basket

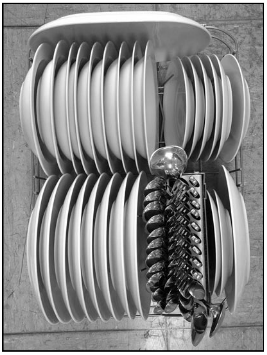

Arrangement lower basket

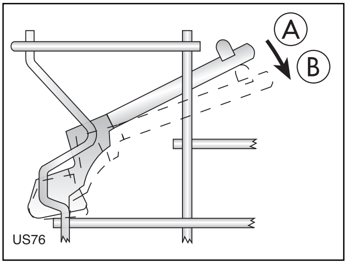

Cup racks: position A

Installation

Any electrical and/or plumbing work required to install this appliance should be carried out by a qualified electrician and/or plumber or competent person.

Remove all packaging before positioning the machine.

If possible, position the machine next to a water tap and a drain.

Fitting under a counter

(kitchen worktop or sink)

By removing the machine's worktop, you can install it under a close fitting sink unit or a pre-existing top, providing the dimensions of the recess correspond to those shown in the picture.

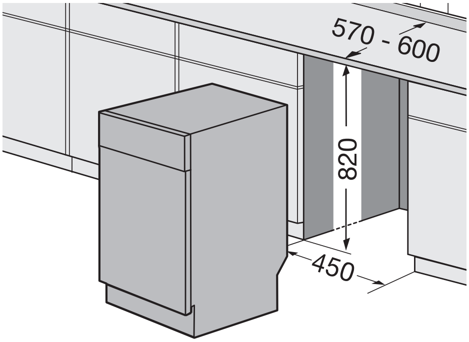

Proceed as follows:

- Remove the machine's worktop by unscrewing the two rear retaining screws, pull the worktop from the back of the machine and slide out the front slots, lifting the worktop.

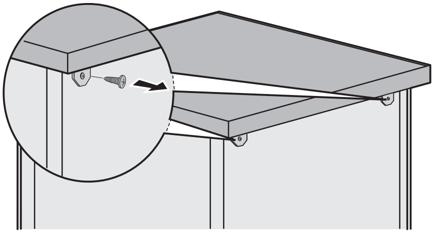

Insert the machine after adjusting the levelling with the adjustable feet. When inserting the machine, ensure that the water inlet and drain hoses are not kinked or squashed.

During all operations that involve accessibility to internal components the dishwasher has to be unplugged.

Be sure that once the appliance has been installed, it is easily accessible for the service engineer in the event that a repair is required.

If the dishwasher is later used as a free-standing appliance, the original worktop must be re-mounted.

The plinth on free-standing appliances is not adjustable.

Levelling

Good levelling is essential for correct closure and sealing of the door.
When the appliance is correctly levelled, the door will not catch on either side of the cabinet.
If the door does not close correctly, loosen or tighten the adjustable feet until the machine is perfectly level.

Water supply connections

This dishwasher may be fed with either hot (max. 60°) or cold water. Nevertheless we advise you a cold water supply.

A hot water supply is not always efficient with very soiled crockery as it shortens the washing programmes a lot.

For making the connection itself, the coupling nut fitted to the machine’s supply hose is designed to screw onto a 3/4" gas thread spout or to a purpose made quick-coupling tap such as the Press-block.

The water pressure must be within the limits given in the "Technical specifications". Your local Water Authority will advise you on the average mains pressure in your area.

The water inlet hose must not be kinked, crushed, or entangled when it is being connected.

The dishwasher features fill and drain hoses which can be turned either to the left or the right to suit the installation by means of the locknut. **The locknut must be correctly fitted to avoid water leaks.**

(Attention! NOT all models of dishwashers have fill and drain hoses provided with locknut. In this case, this kind of facility is not possible).

If the machine is connected to new pipes or pipes which have not been used for a long time, you should run the water for a few minutes before connecting the inlet hose.

DO NOT use connection hoses which have previously been used for an old appliance.

This appliance has been fitted with safety features which will prevent the water used in the appliance from returning back into the drinking water system. This appliance complies with the applicable plumbing regulations.

Water inlet hose with safety valve

After connecting the double-walled water inlet hose, the safety valve is next to the tap. Therefore the water inlet hose is only under pressure while the water is running. If the water inlet hose starts to leak during this operation, the safety valve cuts off the running water.

Please take care when installing the water inlet hose:

- The electrical cable for the safety valve is in the double-walled water inlet hose. Do not immerse the water inlet hose or the safety valve in water.
- If water inlet hose or the safety valve is damaged, remove the mains plug immediately.
- A water inlet hose with safety valve must only be replaced by the Service Force Centre.
- Place the water inlet hose in such a way that it is never higher than the bottom edge of the safety valve.

Warning!
Dangerous voltage

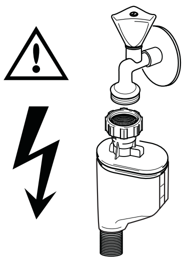

Water outlet hose connection

The end of the drain hose can be connected in the following ways:

1. To the sink outlet spigot, securing it to the underside of the work surface. This will prevent waste water from the sink running into the machine.
2. To a stand pipe provided with vent-hole, minimum internal diameter 4 cm.

The waste connection must be at a height of between 30 cm (minimum) and 100 cm (maximum) from the bottom of the dishwasher.

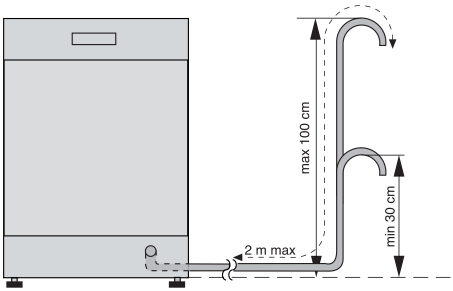

The drain hose can face either to the right or left of the dishwasher

Ensure the hose is not bent or squashed as this could prevent or slow down the discharge of water.

The sink plug must not be in place when the machine is draining as this could cause the water to syphon back into the machine.

If you use a drain hose extension it must be no longer than 2 metres and its internal diameter must be no smaller than the diameter of the hose provided.

Likewise the internal diameter of the couplings used for connections to the waste outlet must be no smaller than the diameter of the hose provided.

When connecting the drain hose to an under sink trap spigot, **the entire plastic membrane (A) must be removed**. Failure to remove all the membrane will result in food particles building up over time eventually blocking the dishwasher drain hose spigot

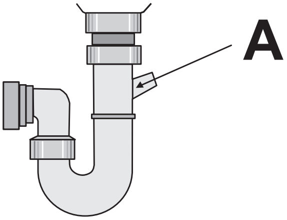

Our appliances are supplied with a security device to protect against the return of dirty water back into the machine.
If the spigot of your sink has a "no return valve" incorporated this can prevent the correct draining of your dishwasher. We therefore advise you to remove it.

Electrical connection

Safety standards require the appliance to be earthed.

Prior to using the appliance for the first time, ensure that the rated voltage and type of supply on the rating plate match that of the supply where the appliance is to be installed. The fuse rating is also to be found on the rating plate.

Always plug the mains plug into a correctly installed shockproof socket.

Multi-way plugs, connectors and extension cables must not be used. This could constitute a fire hazard through overheating.

If necessary, have the domestic wiring system socket replaced. In case that the electrical cable has to be replaced, contact your local Service Force centre.

The plug must be accessible after the appliance has been installed.

Never unplug the appliance by pulling on the cable. Always pull the plug.

The manufacturer accepts no liability for failure to observe the above safety precautions.

Environment concerns

Packaging material

The packaging materials are environmentally friendly and can be recycled. The plastic components are identified by markings, e.g. >PE<, >PS<, etc. Please dispose of the packaging materials in the appropriate container at the community waste disposal facilities.

When a unit is no longer being used:

- Pull the plug out of the socket.
- Cut off the cable and plug and dispose of them.
- Dispose of the door catch. This prevents children from trapping themselves inside and endangering their lives.

Old appliance

The symbol on the product or on its packaging indicates that this product may not be treated as household waste. Instead it shall be handed over to the applicable collection point for the recycling of electrical and electronic equipment. By ensuring this product is disposed of correctly, you will help prevent potential negative consequences for the environment and human health, which could otherwise be caused by inappropriate waste handling of this product.
For more detailed information about recycling of this product, please contact your local city office, your household waste disposal service or the shop where you purchased the product.

European guarantee

This appliance is guaranteed by Electrolux, in each of the countries listed in the following page, for the period specified in the appliance guarantee or otherwise by law. If you move from one of these countries to another of these countries the appliance guarantee will move with you subject to the following qualifications:

- The appliance guarantee starts from the date you first purchased the appliance which will be evidenced by production of a valid purchase document issued by seller of the appliance.
- The appliance guarantee is for the same period and to the same extent for labour and parts as exists in your country of residence for this particular model or range of appliances.
- The appliance guarantee is personal to the original purchaser of the appliance and cannot be transferred to another user.
- The appliance is installed and used in accordance with instructions issued by Electrolux and is only used within the home, i.e. is not used for commercial purposes.
- The appliance is installed in accordance with all relevant regulations in force within your new country of residence.

The provisions of this European Guarantee do not affect any of the rights granted to you by law.

www.electrolux.com

Albania	+35 5 4 261 450	Rr. Pjeter Bogdani Nr. 7 Tirane
Belgique/België/Belgien	+32 2 363 04 44	Bergensesteenweg 719, 1502 Lembeek
Česká republika	+420 2 61 12 61 12	Budějovická 3, Praha 4, 140 21
Danmark	+45 70 11 74 00	Sjællandsgade 2, 7000 Fredericia
Deutschland	+49 180 32 26 622	Muggenhofer Str. 135, 90429 Nürnberg
Eesti	+37 2 66 50 030	Mustamäe tee 24, 10621 Tallinn
España	+34 902 11 63 88	Carretera M-300, Km. 29,900 Alcalá de Henares Madrid
France	www.electrolux.fr	
Great Britain	+44 8705 929 929	Addington Way, Luton, Bedfordshire LU4 9QQ
Hellas	+30 23 10 56 19 70	4 Limnou Str., 54627 Thessaloniki
Hrvatska	+385 1 63 23 338	Slavonska avenija 3, 10000 Zagreb
Ireland	+353 1 40 90 753	Long Mile Road Dublin 12
Italia	+39 (0) 434 558500	C.so Lino Zanussi, 26 - 33080 Porcia (PN)
Latvija	+37 17 84 59 34	Kr. Barona iela 130/2, LV-1012, Riga
Lietuva	+370 5 27 80 609	Ozo 10A, LT 08200 Vilnius
Luxembourg	+352 42 431 3 01	Rue de Bitbourg, 7, L-1273 Hamm
Magyarország	+36 1 252 1773	H-1142 Budapest XIV, Erzsébet királyné útja 87
Nederland	+31 17 24 68 300	Vennootsweg 1, 2404 CG - Alphen aan den Rijn
Norge	+47 81 5 30 222	Risløkkvn. 2, 0508 Oslo
Österreich	+43 18 66 400	Herziggasse 9, 1230 Wien
Polska	+48 22 43 47 300	ul. Kolejowa 5/7, Warsaw
Portugal	+35 12 14 40 39 39	Quinta da Fonte - Edificio Gonçalves Zarco - Q 35 - 2774 - 518 Paço de Arcos
Romania	+40 21 451 20 30	Str. Garii Progresului 2, S4, 040671 RO
Schweiz/Suisse/Svizzera	+41 62 88 99 111	Industriestrasse 10, CH-5506 Mägenwil
Slovenija	+38 61 24 25 731	Electrolux Ljubljana, d.o.o. Gerbičeva 98, 1000 Ljubljana
Slovensko	+421 2 43 33 43 22	Electrolux Slovakia s.r.o., Electrolux Domáce spotrebiče SK, Seberíniho 1, 821 03 Bratislava
Suomi	www.electrolux.fi	
Sverige	+46 (0)771 76 76 76	Electrolux Service, S:t Göransgatan 143, S-105 45 Stockholm
Türkiye	+90 21 22 93 10 25	Tarlabaşı caddesi no : 35 Taksim Istanbul
Россия	+7 095 937 7837	129090 Москва, Олимпийский проспект, 16 БЦ „Олимпик”

Notes

Notes

Notes

www.electrolux.com

117997 87/1-01-26042007